SEREL®

ASSEMBLY INSTRUCTION FOR WALL-HUNG WC PAN WITH FIXING ADAPTER

1

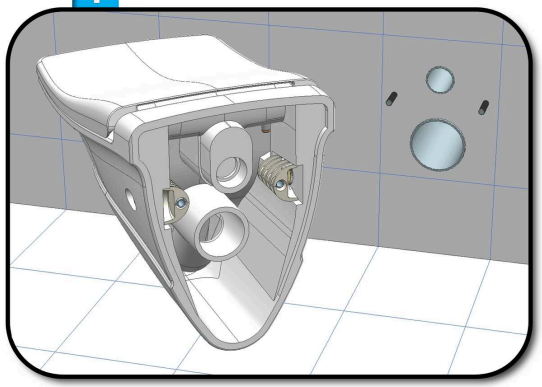

The fixing adapter is already pre-assembled on the wall-hung WC pan. The distance of assembly axix is ready as 180 mm.

2

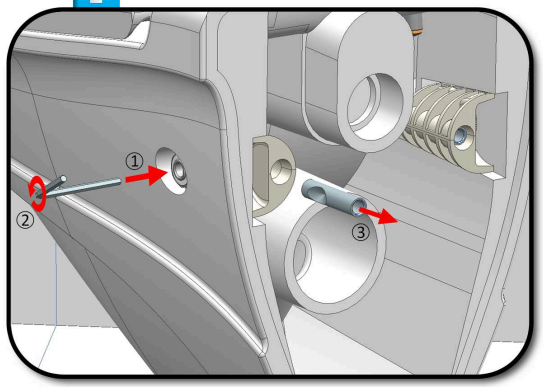

The set screw is softened by using allen wrench, and puller adapter is taken out from the assembly kit.

3

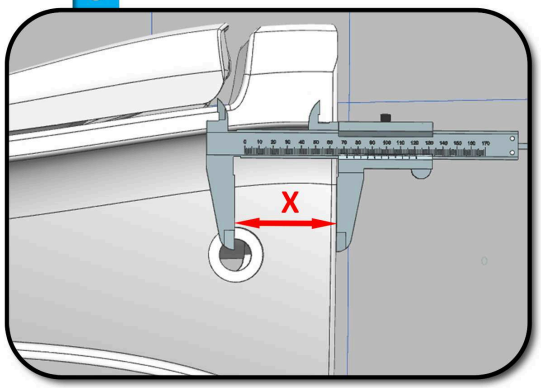

Measure between the central axis of assembly system and the wall plane of ceramic product. Measurement process should be make for both sides.

4

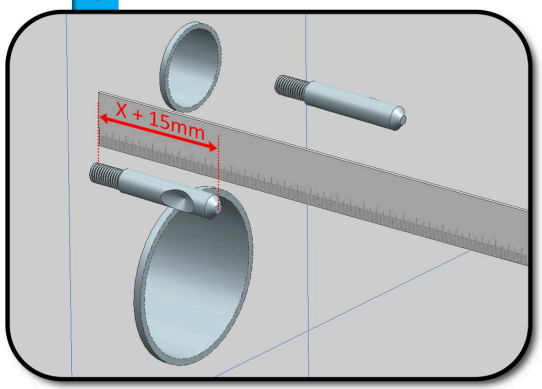

Adjustment by addition of 15mm to measuring operation in the previous step.

5

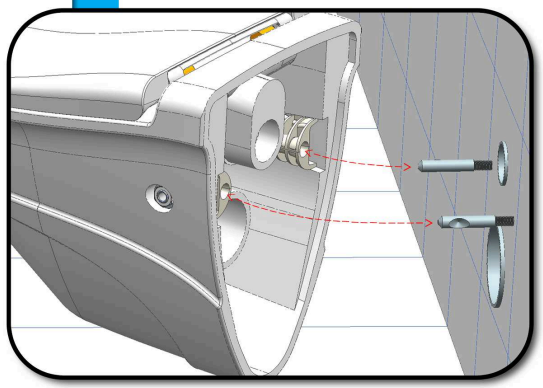

The wall-hung WC pan is assembled to the puller adapter.

6

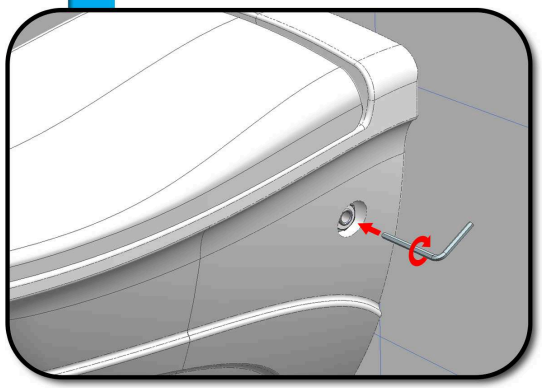

The set screw is tightened by using allen wrench. During this process, the wall-hung WC pan should be pushed to wall.

7

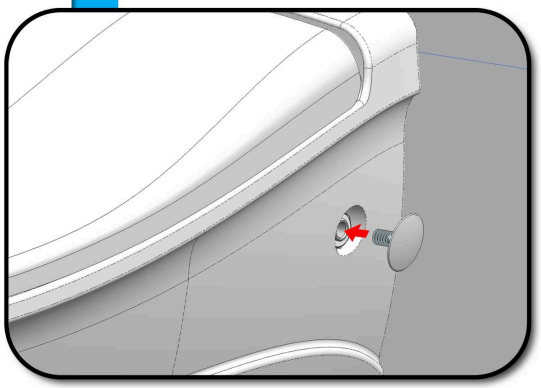

8

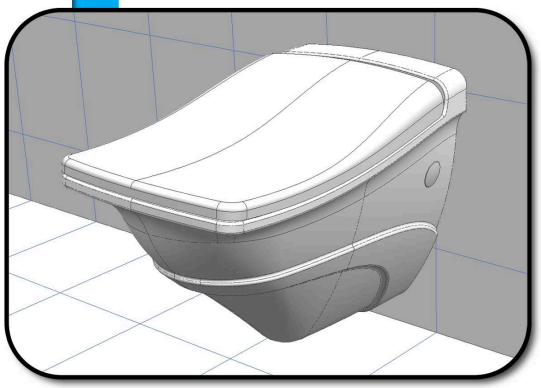

The assembly is completed by fixing the hiding rosettes of the assembly kit into the gaps at 2 sides of the wall-hung WC pan.