[YILLARCA BERABER]

SPYLOS

Ürün Kodu : 102118142 / ST -Spiralli Eviye Bataryası (İhracat Kodu: 102118142EX/STEX)
Product Code: 102118142 / ST- Pullout Sink Mixer (Export Code: 1102118142EX/STEX)
**Localization product codes are available.*

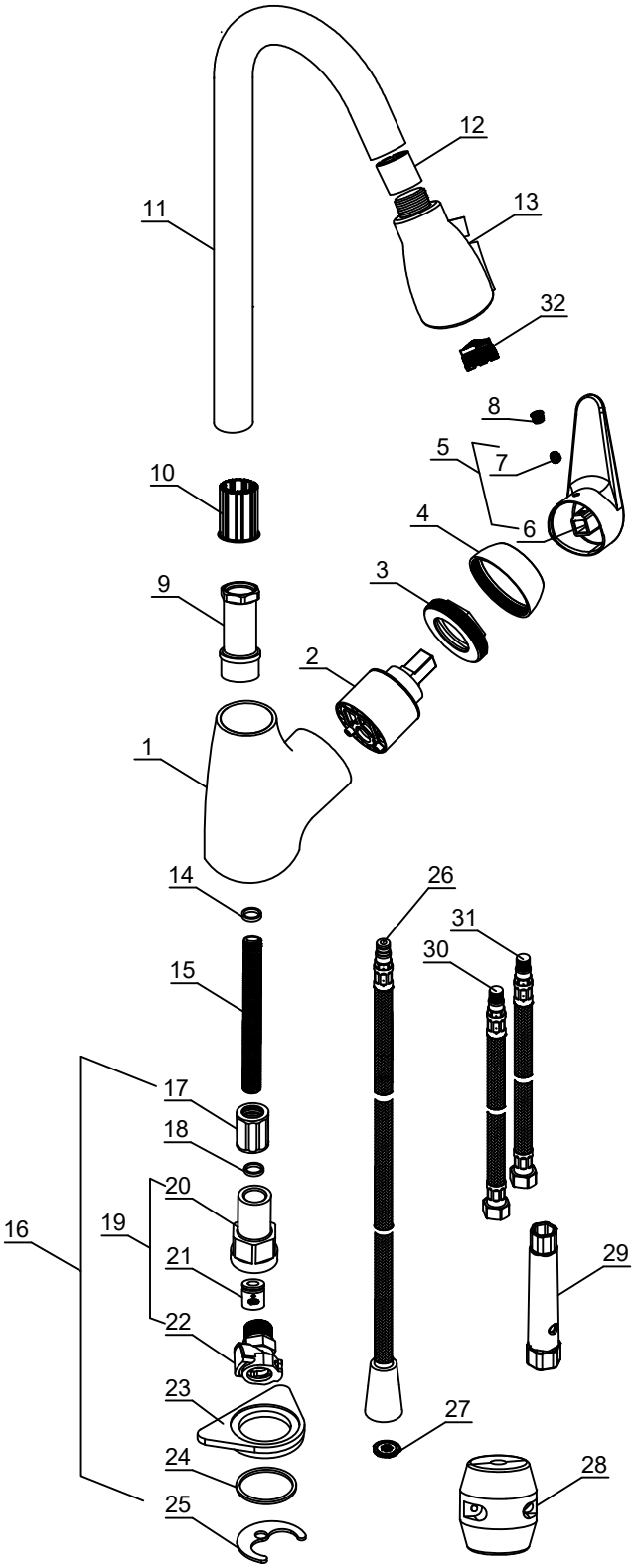

	NO	PARÇA KODU / PART CODE	PARÇA ADI	PART NAME
*	1	110707797	GÖVDE	BODY
	2	102125061SD	Ø35 SERAMİK KARTUŞ	Ø35 CERAMIC CARTRIDGE
	3	110618474	BASKI SOMUNU	NUT GROUP
	4	110715356	ROZET	ROSETTE
	5	103041318S1	KOL GRUBU	HANDLE GROUP
	6	110712293S1	KUMANDA KOLU	HANDLE
	7	112222056	SETUSKUR	SET SCREW
	8	410701015	BİCE	SCREW COVER
	9	410614047	BAĞLANTI BURCU	NIPPEL
	10	410808002	BORU YATAĞI	SUPPORT PART
	11	110702228	BORU	SPOUT
	12	410834005	EL DUŞU YATAĞI	SUPPORT PART
	13	402138008	EL DUŞU	HAND SHOWER
	14	110803825	CONTA	GASKET
	15	112202001	BORU	SPOUT
	16	103051983	ALT BAĞLANTI GRUBU	FIXING GROUP
	17	110718402	SOMUN	NUT
	18	110803825	CONTA	GASKET
	19	102126790	GRUP	GROUP
	20	110614629	NİPEL	CONNECTION NIPPEL
	21	102126153	ÇEKVALF	NON RETURN VALVE
	22	402126147	OUICK CONNECTOR GRUBU	OUICK CONNECTOR GROUP
	23	110824553	DESTEK PARÇASI	SUPPORT
	24	110803587	CONTA	GASKET
	25	112217088	RONDEL	METAL WASHER
	26	402139021	EL DUŞU HORTUMU	SHOWER HOSE
**	27	102126560D5	DEBİ LİMİTÖRLÜ CONTA	FLOW LIMITER GASKET
	28	102126749	AĞIRLIK GRUBU	WEIGHT GROUP
	29	410804001	ANAHTAR	KEY
	30	102139019	ESNEK BAĞLANTI HORTUMU	FLEXIBLE HOSE
	31	102139020	ESNEK BAĞLANTI HORTUMU	FLEXIBLE HOSE
	32	102133100NTJV	PERLATÖR	AERATOR

*** İŞARETLİ PARÇALAR YEDEK PARÇA OLARAK SATILMAZ**
****102118142ST/STEX DEBİ LİMİTÖRLÜ CONTA KODU: 102126560D5**
*** MARKED PARTS ARE NOT SOLD AS SPARE PART**
**** 102118142ST/STEX FLOW LIMITER GASKET CODE: 102126560D5**

E.C.A. önceden haber vermeksizin, ürünler ve ürünlerin teknik detaylarında değişiklik yapma hakkını saklı tutar.
We reserve the right to alter product specification and colors and to make technical modifications without prior notice.