TIERA

Ürün Kodu : 102108989A1/A1ST- Lavabo Bataryası/Pvd Koyu Altın Görünümlü (İhracat Kodu:102108989A1EX/A1STEX)
Product Code: 102108989A1/A1ST - Basin Mixer/Dark Gold Effect (Export Code: 102108989A1EX/A1STEX)

**Localization product codes are available.*

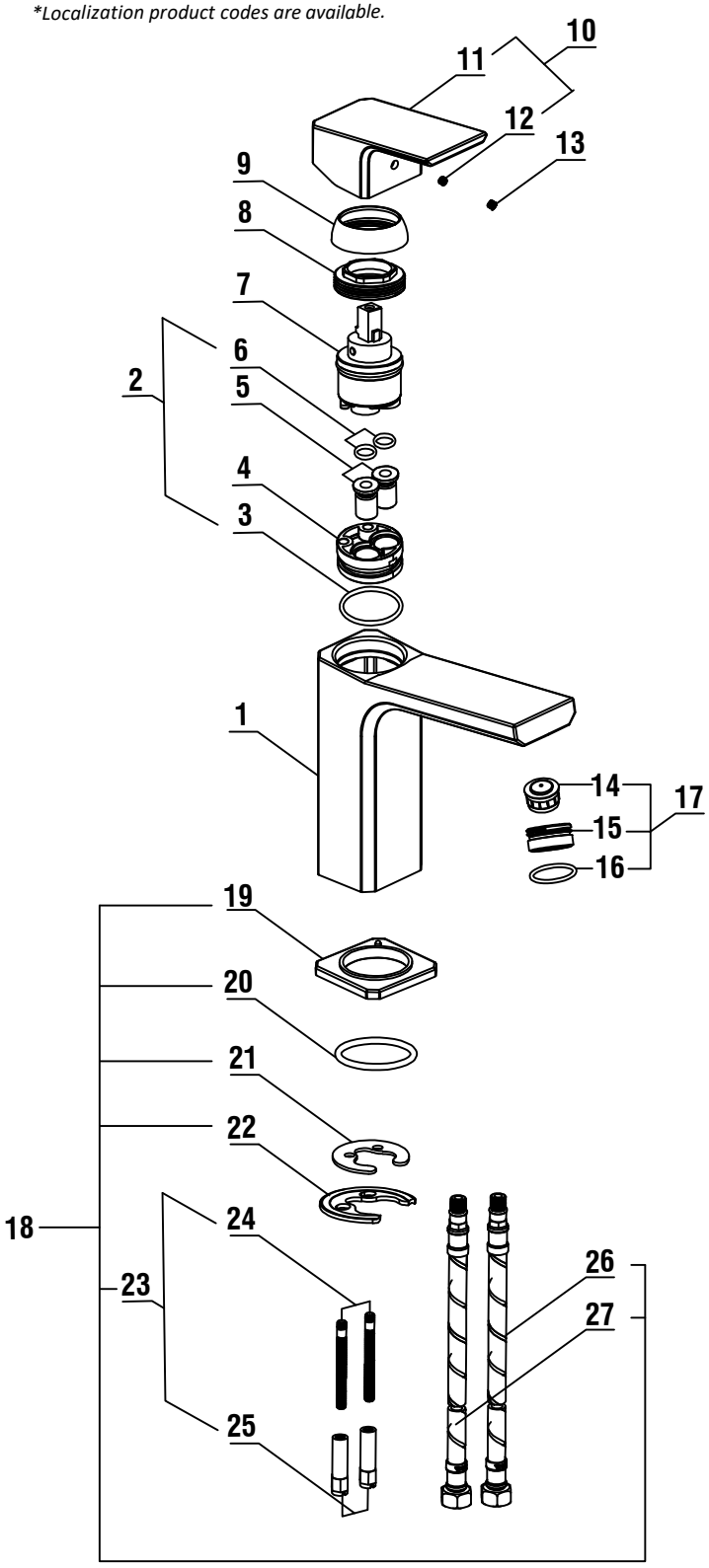

	NO	PARÇA KODU / PART CODE	PARÇA ADI	PART NAME
*	1	110777164A1	GÖVDE	BODY
	2	102126362P	İÇ GÖVDE GRUBU	INNER BODY GROUP
	3	110810415	O-RING	O-RING
	4	110807081	PLASTİK İÇ GÖVDE	INNER BODY
	5	110614623	İÇ GÖVDE NİPELİ	CONNECTION NIPPLE
	6	110810248	O-RING	O-RING
	7	101035009	Ø35 KARTUŞ	Ø35 CERAMIC CARTRIDGE
	8	110618474	BASKI SOMUNU	NUT
	9	110715356A1	KOL ALTI ROZETİ	ROSETTE
	10	102126716A1	KOL GRUBU	HANDLE GROUP
	11	110712255A1	KOL	HANDLE
	12	112222056	M5x5 SETSKUR	SET SCREW
	13	410701015A1	BİCE	SCREW COVER
	14	102133056NEHZ	PERLATÖR	AERATOR
	15	110718417A1	SOMUN	NUT
	16	110810370	O-RING	O-RING
**	17	102133106A1NHZ	PERLATÖR GRUBU	AERATOR GROUP
	18	102126702A1	ALT BAĞLANTI GRUBU	FIXING GROUP
	19	110715365PA1	GÖVDE ALT ROZET	ROSETTE
	20	110810381	O-RING	O-RING
	21	110803712	CONTA	GASKET
	22	112222115	RONDEL	METAL GASKET
	23	102199330	SAPLAMA GRUBU	STUD BOLT GROUP
	24	112222166	VIDA	SCREW
	25	110618446	SOMUN	NUT
	26	102139019	ESNEK HORTUM	FLEXIBLE HOSE
	27	102139020	ESNEK HORTUM	FLEXIBLE HOSE

*** İŞARETLİ PARÇALAR YEDEK PARÇA OLARAK SATILMAZ**
**** 102108989A1ST/A1STEX PERLATÖR KODU: 102133106A1NH5**
*** MARKED PARTS ARE NOT SOLD AS SPARE PART**
**** 102108989A1ST/A1STEX AERATOR CODE: 102133106A1NH5**

E.C.A. önceden haber vermeksizin, ürünler ve ürünlerin teknik detaylarında değişiklik yapma hakkını saklı tutar.
We reserve the right to alter product specification and colors and to make technical modifications without prior notice.