# LIFE

*Ürün Kodu :* *Ankastre Banyo Bataryası Sıva Üstü Grubu / PVD Koyu Altın Görünümlü*

*Product Code :* *Concealed Bath Mixer Surface Mounted Group / PVD Dark Gold Effect*

**Localization product codes are available.*

Ürün Kodu / Product Code : 102167122A1-K
102167122A1-Y
102167122A1-E

İhracat Kodu / Export Code : 102167122A1EX-K
102167122A1EX-Y
102167122A1EX-E

**Localization product codes are available.*

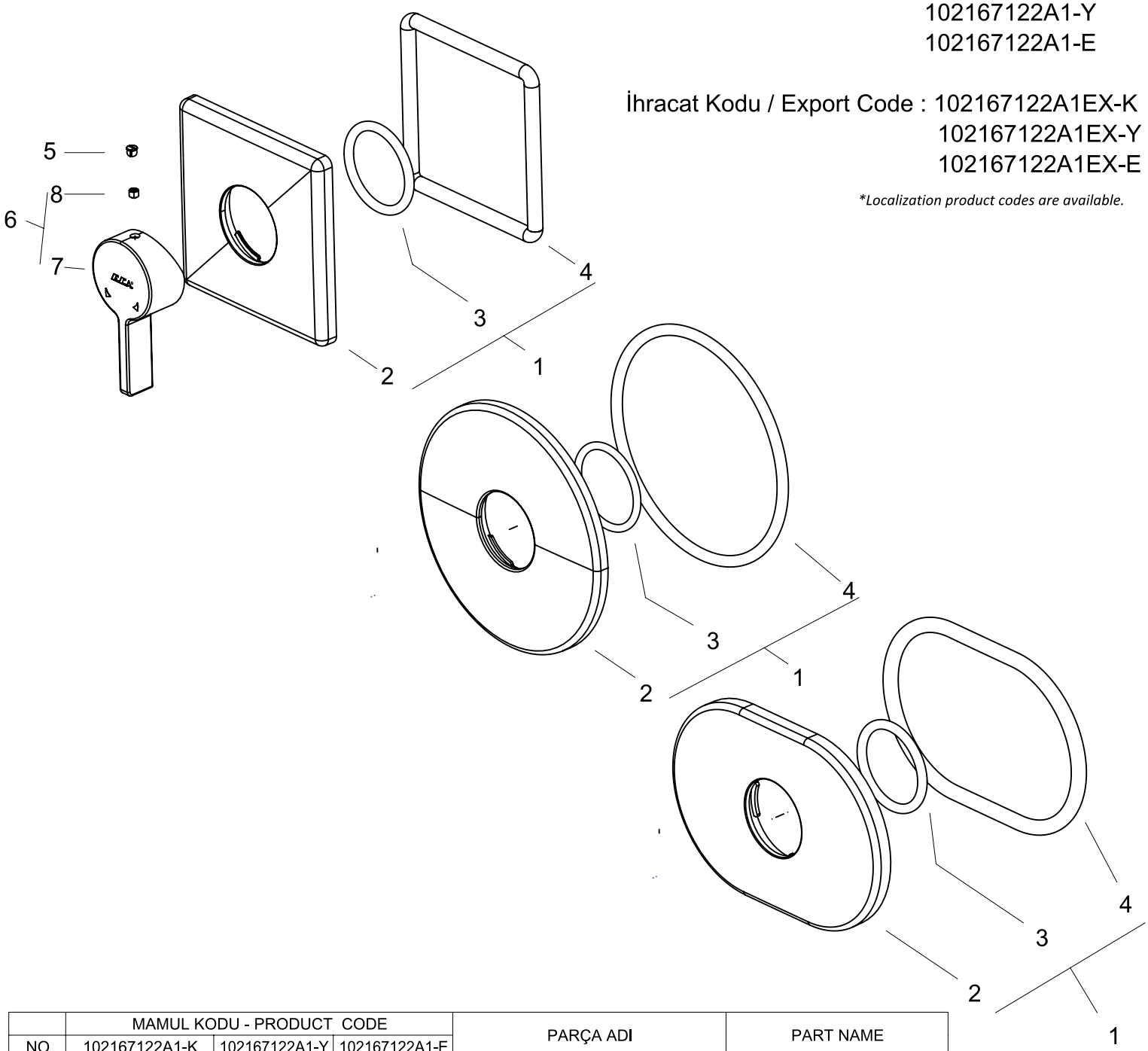


| | MAMUL KODU - PRODUCT CODE | | | PARÇA ADI | PART NAME |
|---|---|---|---|---|---|
| NO | 102167122A1-K | 102167122A1-Y | 102167122A1-E | | |
| 1 | 102126350A1 | 103041277A1 | 103051362A1 | ROZET GRUBU | ROSETTE GRUP |
| 2 | 110715374P1A1 | 110715382A1 | 110715362A1 | ROZET | ROSETTE |
| 3 | 110810479 | 110810493 | 110810479 | O-RING | O-RING |
| 4 | 110810351 | 110810492 | 110810343 | FİTİL O-RING | O-RING CORD |
| 5 | 410701015A1 | | | BICE | SCREW COVER |
| 6 | 103051284A1S1 | | | KOL GRUBU | HANDLE GROUP |
| 7 | 110712300A1S1 | | | KOL | HANDLE |
| 8 | 412222007 | | | SETUSKUR | SET SCREW |



E.C.A. önceden haber vermeksizin, ürünler ve ürünlerin teknik detaylarında değişiklik yapma hakkını saklı tutar.
We reserve the right to alter product specification and colors and to make technical modifications without prior notice.